Hyperpanel *stm32py Daughter Board*

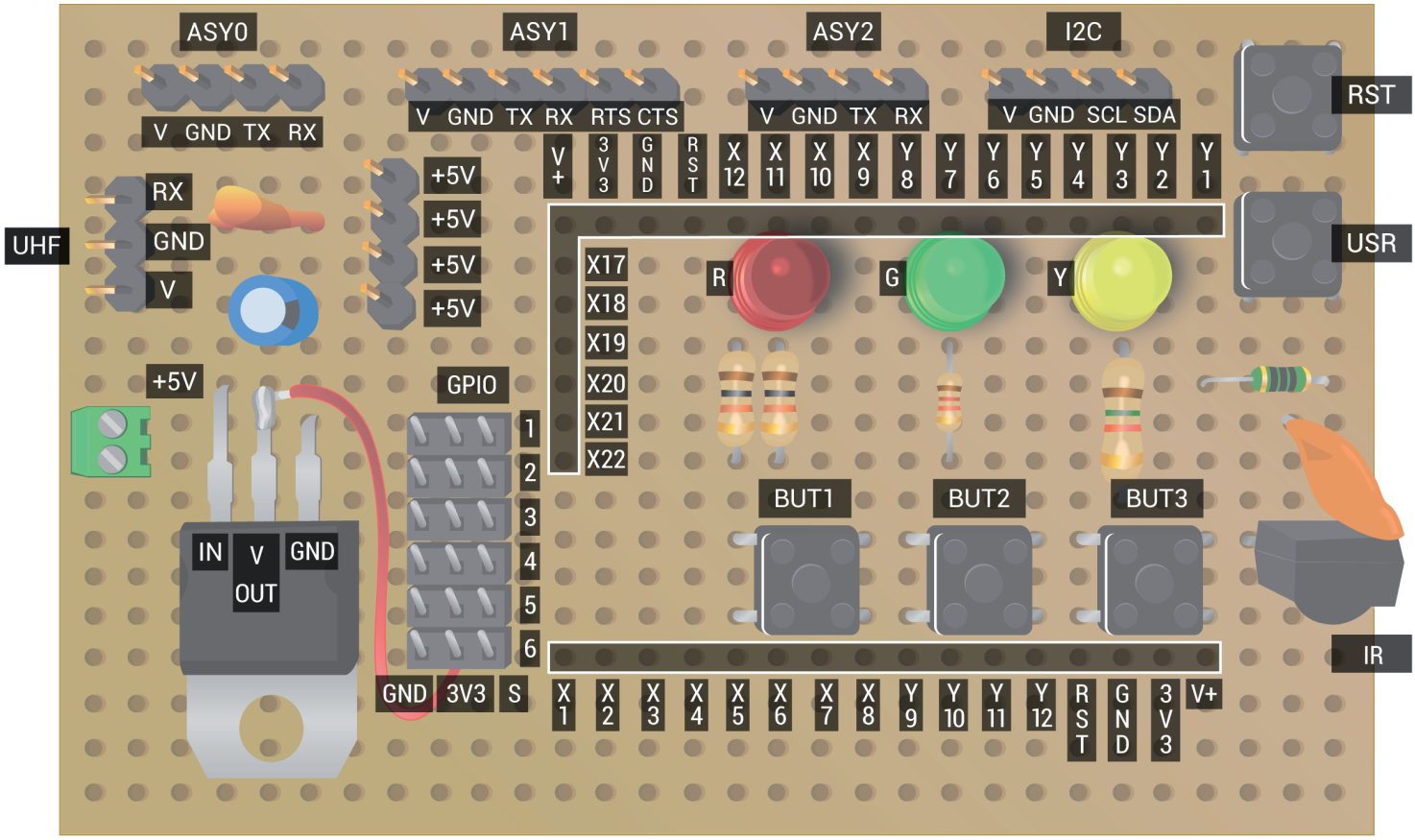

Daughter Board Label		PY Paint	STM32 names		
ASYO	TX	Y1	37	PC6	USART6_TX
	RX	Y2	38	PC7	USART6_RX
ASY1	TX	X1	14	PA0	USART4_TX
	RX	X2	15	PA1	USART4_RX
	RTS	X7	22	PA6	-
	CTS	X8	23	PA7	-
ASY2	TX	X3	16	PA2	USART2_TX
	RX	X4	17	PA3	USART2_RX
I2C	SCL	X9	58	PB6	I2C1_SCL
	SDA	X10	59	PB7	I2C1_SDA
IR UHF	-	Y9	29	PB10	TIM2_CH3
	RX	Y10	30	PB11	TIM2_CH4
LED	R	Y3	61	PB8	
	G	Y4	62	PB9	
	Y	Y5	33	PB12	
BUT	1	Y6	34	PB13	
	2	Y11	26	PB0	
	3	Y12	27	PB1	
	USR	X18	2	PC 13	
	RST	RST	7	NRST	

Daughter Board Label		PY Paint	STM32 names		
GPIO	1	X5	20	PA4	
	2	X6	21	PA5	
	3	X11	24	PC4	DAC 1
	4	X12	25	PC5	DAC 2
	5	Y7	35	PB14	ADC 1
	6	Y8	36	PB15	ADC 2
JTAG	P5	-	46	PA13	JTMS + R
	P4	-	49	PA14	JTCK + G
	P3	-	50	PA15	JTDI + Y
	X17	X17	55	PB3*	JTDO
	P2	-	56	PB4	NJTRST + B
DIV	RST	7			NRST
	GND				
	3V3	(out)			
	V+	(in)			
	-	(out) is 3V3			
BOOT	P1	-	60		BOOT Ø
			28	PB2	BOOT 1

(*) PB3 is connected to PY USR button